FT-Assignment **Object Oriented Analysis and Design** **Set: B**

ID:	Name:	Section:

Q1. Consider the following class diagram and fill up the table below:

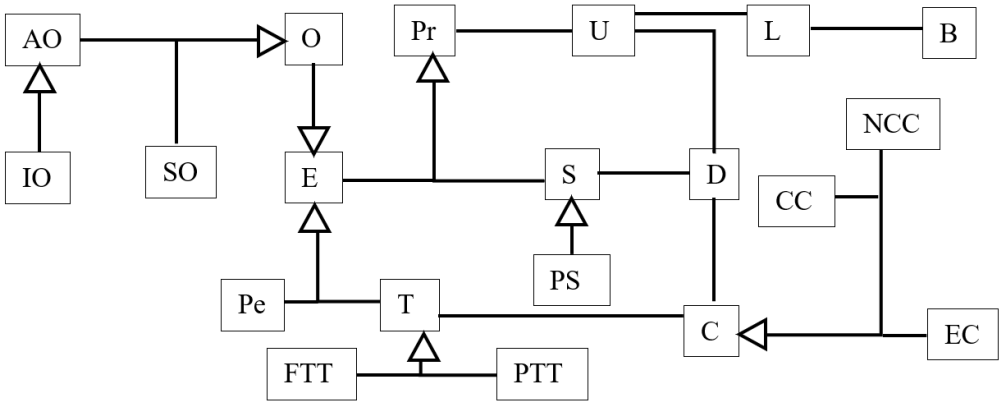

Class	NOC Value	DIT Value	CBC Value
Pr			
S			
Pe			
PTT			
SO			
IO			
PS			
U			
C			
CC			

Answer the following questions using information from the table

1. The class with highest influence on other classes is _____.
2. The class with lowest influence on other classes is _____.
3. The class with highest reuse potential is _____.
4. The class with lowest reuse potential is _____.
5. The most independent class is _____.
6. The class with highest value of CBC is _____.

Q2. Find the value of LCOM for the following class:

ABC
a1 a2 a3 a4
M1(a1) M2(a1, a2) M3(a3) M4(a3, a4) M5(a4)

Q3. Consider the class ABC. Consider the weight of M1, M2, M3 and M4 is 2, 3, 3 and 2 respectively. Calculate the CCC (weight) of M5 from the following graph and then calculate the value of WMC.

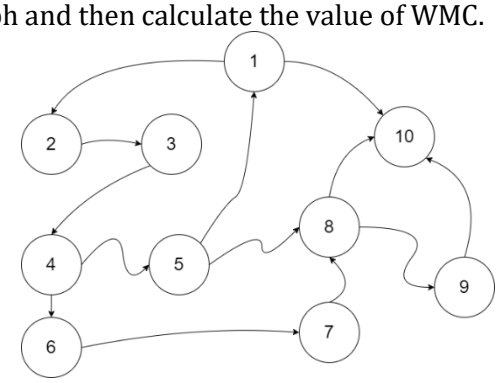

Q3 Answer: